Product Data Sheet

DX56010

Gama GW FIT

Dispozitiv de cuplare drept şi rotativ pentru manta cu grad de protecție IP54.

Culoare	Gri RAL 7035	Grad IP	IP54
Pas ISO	M16x1.5	Manta Ø (mm)	10
Tip	Fix	Electrocod	210

DIMENSIONAL

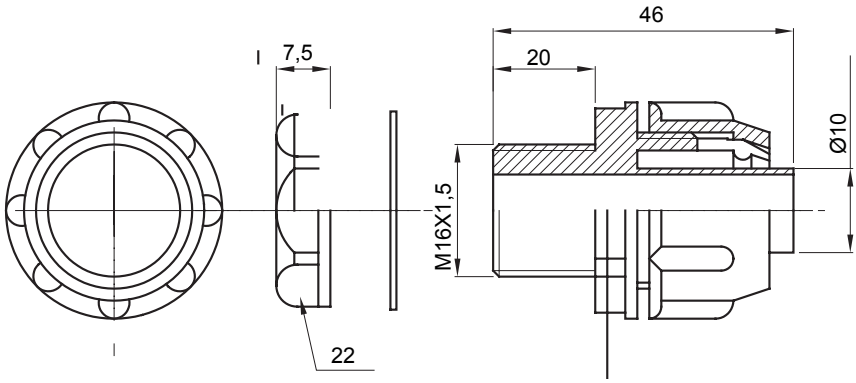

TECHNICAL SYMBOLOGY

IP

IP54

STANDARDS/APPROVALS

CE

GEWISS S.p.A. Via Domenico Bosatelli 1
24069 Cenate Sotto - Bergamo - Italy
tel. +39 035 94 61 11 fax +39 035 94 69 09

www.gewiss.com
sat@gewiss.com
Last update 17/04/2024

Data, measures, designs and pictures are shown only as informative purposes, and could be changed without previous notice