Product Data Sheet

GW70493NM

70 RT HP Range

70 RT HP is a complete offer of rotary isolator switches from 16 A to 160 A, available in boxes both in insulating material and metal, in control or emergency versions, compatible with the main applications for residential, tertiary and industrial contexts.
DC versions for photovoltaic applications are also available from 16 A to 40 A in insulating box.
The series is completed with versions for board from 16 A to 800 A and for DIN rail fixing from 16 A to 63 A, which can be equipped with auxiliary contacts.
The devices have been designed to reduce wiring time, facilitate installation and guarantee the maximum safety and robustness even in the most demanding conditions.

Wy??czniki	Izolator obrotowy	Wersja	Skrzynka
Materia?	Metal	Typ	Dla sytuacji awaryjnych
Pr?d znamionowy (A)	125	Liczba biegunów	3P+N
Kolor ga?ki	Czerwony	Zamykany	TAK (maks. 3 blokady w trybie OFF)
Ochrona IP	IP66	Odporno?? na wstrz?sy	IK10 (puszka); IK08 (pokr?t?o)
Temperatura otoczenia	-25 +60 °C	?ruby pokrywy (nr i typ)	4 metalowe ?ruby
Pr?d w AC21A (415V)	125	Pr?d w AC22A (415V)	125
Typ wyposa?enie dodatkowe	Maks. 4 styki pomocnicze (2 na stron?)	Pr?d w AC23A (415V)	125
Kabel przekrój	4-70 mm²		

DIMENSIONAL

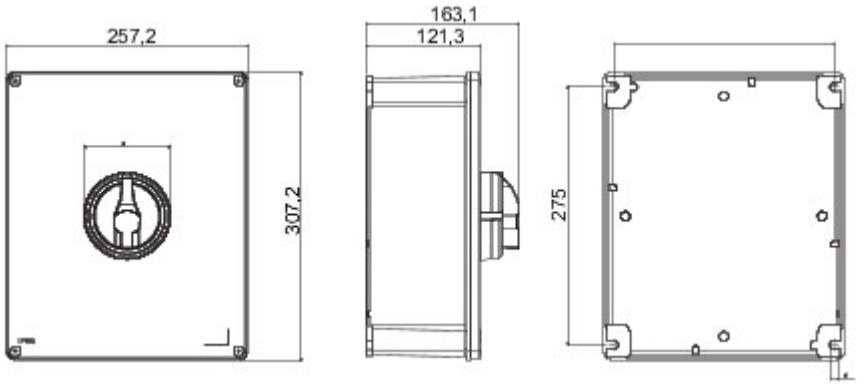

TECHNICAL SYMBOLOGY

IP	IK
IP66	IK10 (puszka); IK08 (pokr?t?o)

STANDARDS/APPROVALS

CE

GEWISS S.p.A. Via A. Volta, 1
24069 Cenate Sotto - Bergamo - Italy
tel. +39 035 94 61 11 fax +39 035 94 69 09

www.gewiss.com
sat@gewiss.com
Last update 24/04/2024

Data, measures, designs and pictures are shown only as informative purposes, and could be changed without previous notice