Product Data Sheet

GW70495NM

70 RT HP serie

Draaischeidingsschakelaars

70 RT HP is a complete offer of rotary isolator switches from 16 A to 160 A, available in boxes both in insulating material and metal, in control or emergency versions, compatible with the main applications for residential, tertiary and industrial contexts.
DC versions for photovoltaic applications are also available from 16 A to 40 A in insulating box.
The series is completed with versions for board from 16 A to 800 A and for DIN rail fixing from 16 A to 63 A, which can be equipped with auxiliary contacts.
The devices have been designed to reduce wiring time, facilitate installation and guarantee the maximum safety and robustness even in the most demanding conditions.

Stroomonderbreker	Rotary isolator	Uitvoering	Doos
Materiaal	Metaal	Type	For emergency
Nominale stroom (A)	160	Aantal polen	3P+N
Kleur knop	Rood	Vergrendelbaar	YES (max. 3 locks in OFF)
IP-graad	IP66	Stoot-bestendigheid	IK10 (box); IK08 (knob)
Omgevingstemperatuur	-25 +60 °C	Dekselschroeven (aantal en type)	4 metal screws
Current in AC21A (415V)	160	Current in AC22A (415V)	125
Type accessoire	Max. 4 auxiliary contacts (2 per side)	Current in AC23A (415V)	125
Kabel-doorsnede	4-70 mm²		

DIMENSIONAL

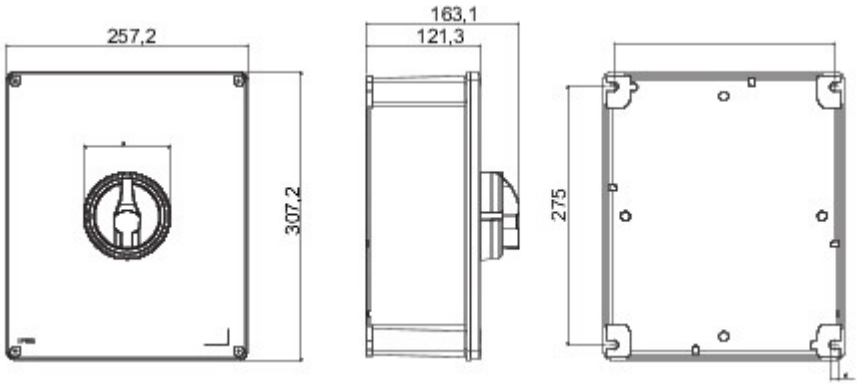

TECHNICAL SYMBOLOGY

IP	IK
IP66	IK10 (box); IK08 (knob)

STANDARDS/APPROVALS

CE

GEWISS S.p.A. Via A. Volta, 1
24069 Cenate Sotto - Bergamo - Italy
tel. +39 035 94 61 11 fax +39 035 94 69 09

www.gewiss.com
sat@gewiss.com
Last update 19/04/2024

Data, measures, designs and pictures are shown only as informative purposes, and could be changed without previous notice