# Product Data Sheet

## GW94048

90 RCD Range

| | |
|---|---|
| Description | RCCB WITH OVERCURRENT PROTECTION |
| Code | MDC 45 |
| No. of poles | 3P |
| No. modules | 3 |
| Rated current | 20 A |
| Rated residual operating current | 30 mA |
| Type | AC |
| Curve | C |
| Rated voltage (IEC/EN 61009-1, 61009-2-1) | 400/415 V |
| Energy limiting class | 1 |

| | | | |
|---|---|---|---|
| Standard | IEC/EN 61009-1, IEC/EN 61009-2-1 | Rated frequency (Hz) | 50/60 Hz |
| Breaking capacity IEC/EN 61009-1 400V (Icn) | 4500 A | Breaking capacity IEC/EN 61009-1 (Ics) | 1 x Icn |
| Breaking capacity IEC/EN 60947-2 400V (Icu) | 4.5 kA | Breaking capacity IEC/EN 60947-2 (Ics) | 100% Icu |
| Insulation voltage (Ui) | 500 V | Level of immunity (8/20 µs) | 250 A |
| Rated impulse withstand voltage (Uimp) | 4 kV | Overvoltage category | III |
| Electrical endurance | 10.000 | Mechanical endurance | 20.000 |
| Section rigid cable | <=1x35 - <=2x16 - <=1x16+2x10 mm² | Section flexible cable | <=1x35 - <=2x16 - <=1x16+2x10 mm² |
| Double connection | YES (only down stream) | Rated tightening torque | 2 Nm |
| Operating temperature | -25 +60° C (derating of In with T>30° C) | Stocking temperature | -40 +70 °C |
| Auxiliaries compatibility | Yes | Assembly position | Any |

## DIMENSIONAL

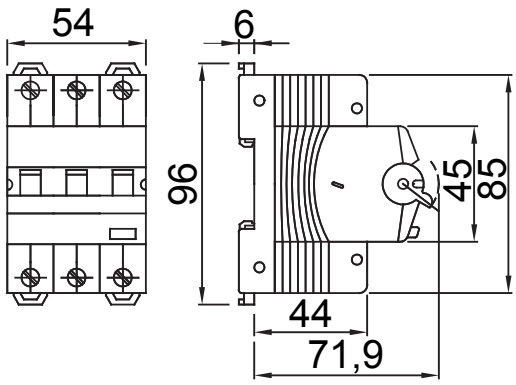


## WIRING DIAGRAM

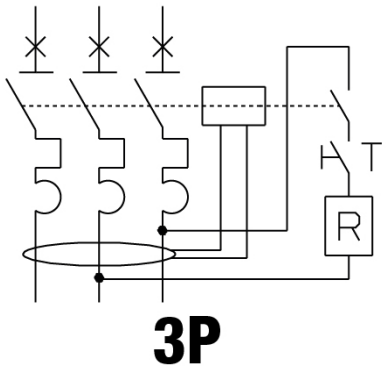


## STANDARDS/APPROVALS

GEWISS S.p.A. Via Domenico Bosatelli 1
24069 Cenate Sotto - Bergamo - Italy
tel. +39 035 94 61 11 fax +39 035 94 69 09

www.gewiss.com
sat@gewiss.com
Last update 19/04/2024

Data, measures, designs and pictures are shown only as informative purposes, and could be changed without previous notice