Product Data Sheet

GW50418

FK Range

Systems of accessories for electrical installations used for residential, tertiary and industrial applications. The system consists of fasteners for pipes and cables, cable fittings, accessories for rigid pipes (RK Series) and flexible conduit (DF Series). The system include also a wide variety of cable ties (52FS Range) and terminal blocks (44 Range).

Colour	Grey RAL 7035	Material	Shockproof polymer
For external conduits (mm)	32	Mounting hole Ø (mm)	37
IP with rigid conduit	IP66	IP with corrugated conduit	IP54
Glow Wire Test	750 °C	Operating temperature	-5 +60 °C
Electrocod	21221	Standard	EN 61386-1 - EN 60670-1 (as applicable)

BEHAVIOUR WITH CHEMICAL AND ATMOSPHERIC AGENTS										
Saline solution	Acids		Bases		Solvents				Mineral oil	UV rays
	Concentrated	Diluited	Concentrated	Diluited	Hexane	Benzol	Acetone	Ethyl alcohol		
Resistant	Limited resistance	Limited resistance	Resistant	Resistant	Resistant	Resistant	Resistant	Resistant	Resistant	Limited resistance

DIMENSIONAL

PG 29

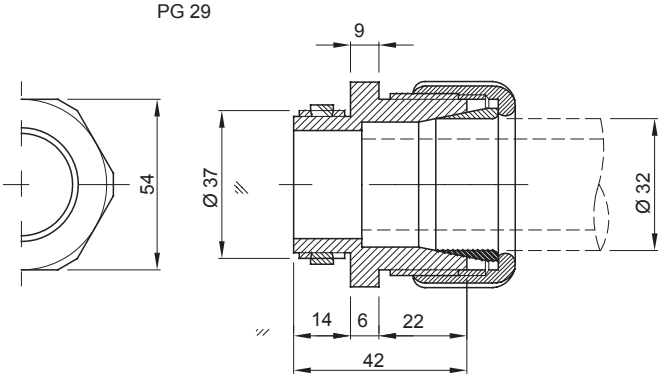

TECHNICAL SYMBOLOGY

750 °C -5 +60 °C

STANDARDS/APPROVALS

GEWISS S.p.A. Via Domenico Bosatelli 1
24069 Cenate Sotto - Bergamo - Italy
tel. +39 035 94 61 11 fax +39 035 94 69 09

www.gewiss.com
sat@gewiss.com
Last update 12/10/2024

Data, measures, designs and pictures are shown only as informative purposes, and could be changed without previous notice