Product Data Sheet

GW66855

IB Range

A product range comprising industrial-type socket-outlets conforming to IEC 60309 Standard, with rotary switch mechanical interlock for individual or group applications on modular bases. The robustness of the products and their resistance to the main chemical and atmospheric agents, together with the high IP66 degree of protection, mean they can be installed in tough environments with critical atmospheric, chemical and mechanical (accidental impact) conditions.

Type of fuse	Ø 22x58 mm	Type	Vertical
Thermo-pressure with ball	80 °C	Impact resistance at -20 °C	20 J
IP degree	IP66	No. of poles	3P+N+E
Mechanical resistance	> IK10	Frequency	50/60 Hz
Operating temperature	-25 +40 °C	Protection	Fuse-holder base (CBF)
With back-mounting box	Yes	Electrocod	2222
Glow wire test	850 °C	Colour	Red
IB socket outlet rated current (In)	50 A	Rated current (A)	63
Reference h	6	Rated voltage	380-415 V
Type of use	Heavy duty		

BEHAVIOUR WITH CHEMICAL AND ATMOSPHERIC AGENTS

Saline solution	Acids		Bases		Solvents				Mineral oil	UV rays
	Concentrated	Diluited	Concentrated	Diluited	Hexane	Benzol	Acetone	Alcohol		
Resistant	Not resistant	Limited resistance	Not resistant	Limited resistance	Resistant	Resistant	Limited resistance	Resistant	Resistant	Resistant

DIMENSIONAL

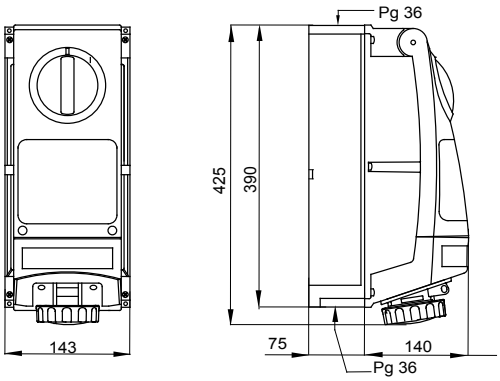

TECHNICAL SYMBOLOGY

80 °C

IP IP66

IK > IK10

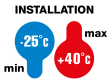

-25 +40 °C

GWT 850 °C

STANDARDS/APPROVALS

Reach Declaration

GEWISS S.p.A. Via Domenico Bosatelli 1
24069 Cenate Sotto - Bergamo - Italy
tel. +39 035 94 61 11 fax +39 035 94 69 09

www.gewiss.com
sat@gewiss.com
Last update 12/10/2024

Data, measures, designs and pictures are shown only as informative purposes, and could be changed without previous notice