Product Data Sheet

GW27422

27 COMBI Range

A complete, versatile system of modular containers, perfectly integrable in the SYSTEM domestic range and able to meet the high protection installation requirements of the residential, commercial and industrial sectors. The 27 COMBI range is available both in the IP40 version and in watertight versions with IP55, IP65 and IP66 degree of protection, recommended for all outdoor applications which are subjected to extreme atmospheric conditions.

Colour	Grey RAL 7035	No. knockout holes Ø23	3 on sides / 1 on the bottom
N. holes Ø 23 with cable gland	1	Type of knockout holes	Removable with tool
IP degree	IP55	Insulation class	II
Lid screws	Stainless steel	Torque screws tightening	0.8 Newton/meter
Outer dim. LxHxD (mm)	66x82x95	Diffuser colour	Red
Lampholder type	E14	Power	Max 25W
Flash frequency	1 Hz	Rated voltage	230 V ac
Glow Wire Test	650 °C	Thermo-pressure with ball	70 °C
Standard	EN 60598-1	Installation temperature	-25 +60 °C
Electrocod	0132		

BEHAVIOUR WITH CHEMICAL AND ATMOSPHERIC AGENTS

Saline solution	Acids		Bases		Solvents				Mineral oil	UV rays
	Concentrated	Diluited	Concentrated	Diluited	Hexane	Benzol	Acetone	Alcohol		
Resistant	Limited resistance	Resistant	Resistant	Resistant	Limited resistance	Not resistant	Not resistant	Not resistant	Limited resistance	Resistant

DIMENSIONAL

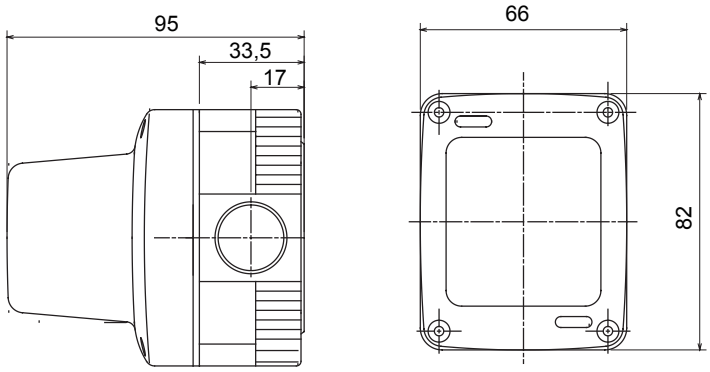

TECHNICAL SYMBOLOGY

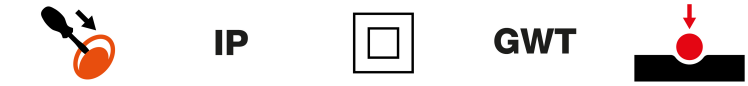

Removable with tool | IP55 | II | 650 °C | 70 °C

STANDARDS/APPROVALS

UK CA CE

GEWISS S.p.A. Via Domenico Bosatelli 1
24069 Cenate Sotto - Bergamo - Italy
tel. +39 035 94 61 11 fax +39 035 94 69 09

www.gewiss.com
sat@gewiss.com
Last update 12/10/2024

Data, measures, designs and pictures are shown only as informative purposes, and could be changed without previous notice