Product Data Sheet

GW12136

CHORUSMART - Domestic range

Wide range of control devices, sockets for power supply (conforming to national and international standards) signal pick-up, climate control, comfort management, technical alarm signalling and emergency lighting management. The ChoruSmart modular devices are available in five colours, glossy white, satin white, natural beige, satin black and lacquered titanium and in various sizes from 1/2, 1, 2 and 3 modules. Thanks to the mounting supports for rectangular, square and round boxes, endless combinations can be created with the ChoruSmart range of plates.

Category	Push-button	Button key	Pull-cord
Colour	Satin black	Description	1P NO - 16A
Voltage	250 V ac	Standard	EN 60669-1
Resistance at test voltage	2000 V at 50 Hz for 1 minute	Insulation resistance	> 5 MOhm
Wiring terminals	With screw	Prolonged operation switch (no.of position changes)	40.000 at In 250 V ac cosφ=0,6
Thermo-pressure with ball	125 °C	Glow Wire Test	850 °C
Terminal grip on cable traction	> 50 N	Terminal tightening capacity stranded cables (mm²)	min. 0,75 - max. 2x4
Terminal tightening capacity solid cables (mm²)	min. 0,5 - max. 2x2,5	No. modules	1
Material	Technopolymer	Electrocod	0130

DIMENSIONAL

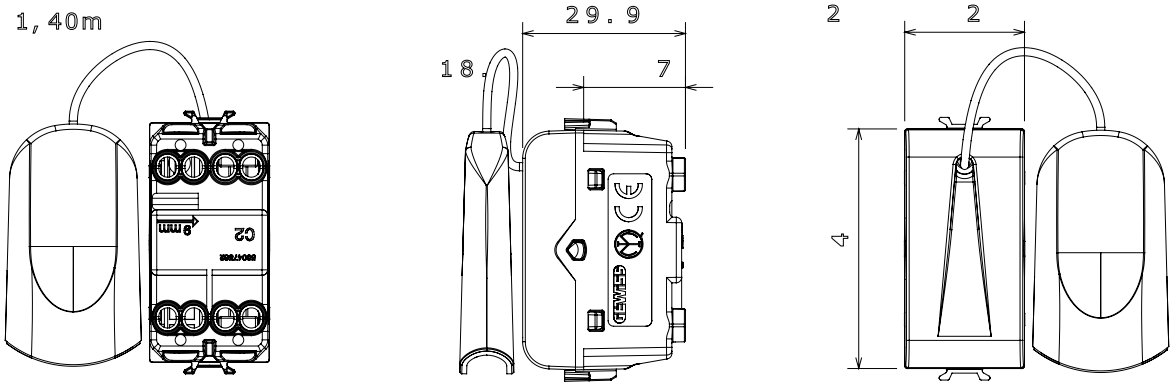

TECHNICAL SYMBOLOGY

STANDARDS/APPROVALS

GEWISS S.p.A. Via Domenico Bosatelli 1
24069 Cenate Sotto - Bergamo - Italy
tel. +39 035 94 61 11 fax +39 035 94 69 09

www.gewiss.com
sat@gewiss.com
Last update 12/10/2024

Data, measures, designs and pictures are shown only as informative purposes, and could be changed without previous notice