Product Data Sheet

DX54222

Gama GW FIT

Dispozitiv de cuplare drept şi rotativ pentru manta cu grad de protecție IP54.

Culoare	Gri RAL 7035	Grad IP	IP54
Pas GAS	3/4"	Manta Ø (mm)	22
Tip	Rotativ	Electrocod	210

DIMENSIONAL

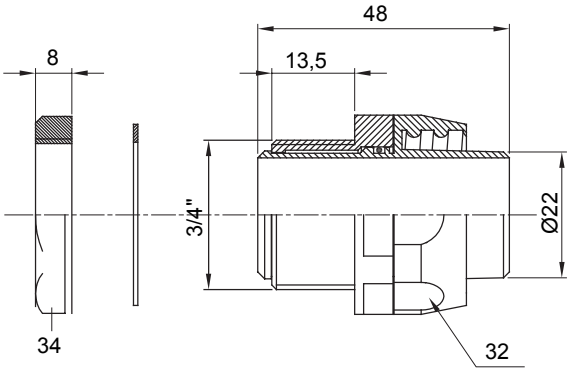

TECHNICAL SYMBOLOGY

IP

IP54

STANDARDS/APPROVALS

CE

GEWISS S.p.A. Via Domenico Bosatelli 1
24069 Cenate Sotto - Bergamo - Italy
tel. +39 035 94 61 11 fax +39 035 94 69 09

www.gewiss.com
sat@gewiss.com
Last update 28/04/2024

Data, measures, designs and pictures are shown only as informative purposes, and could be changed without previous notice