JOINON

GEWISS

CE

GWJ8013					
	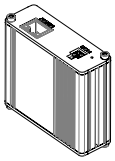	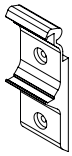	2x		
	A	B	C	D	E

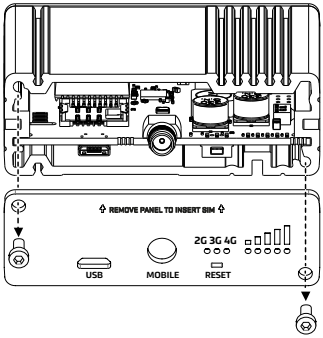

1

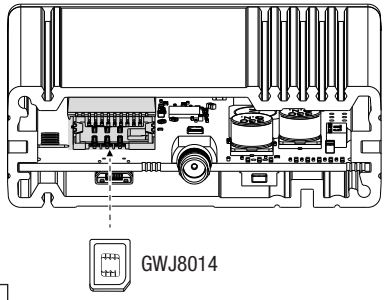

2

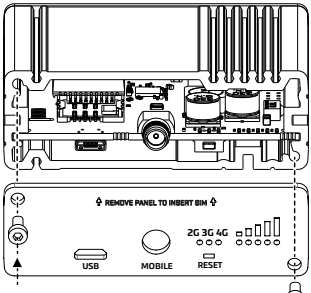

3

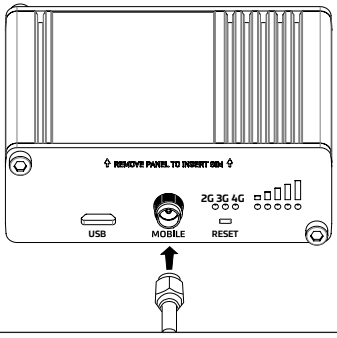

4

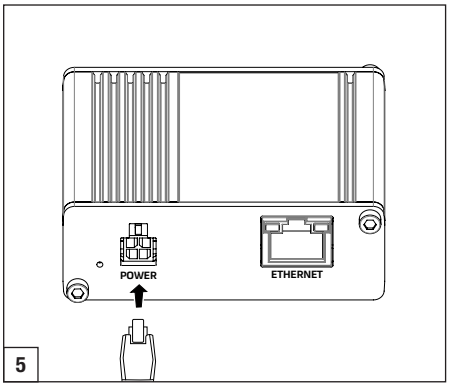
POWER
ETHERNET
5

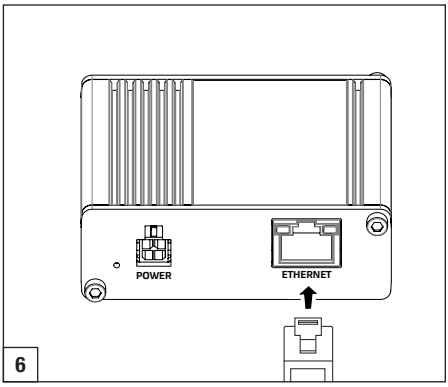
POWER
ETHERNET
6

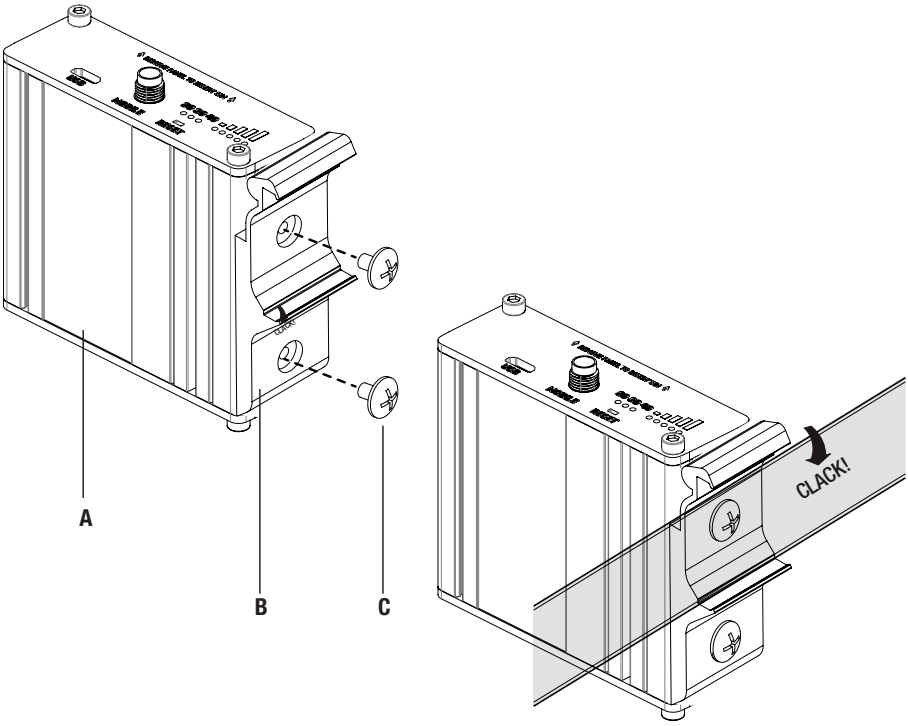
A
B
C
CLACK!

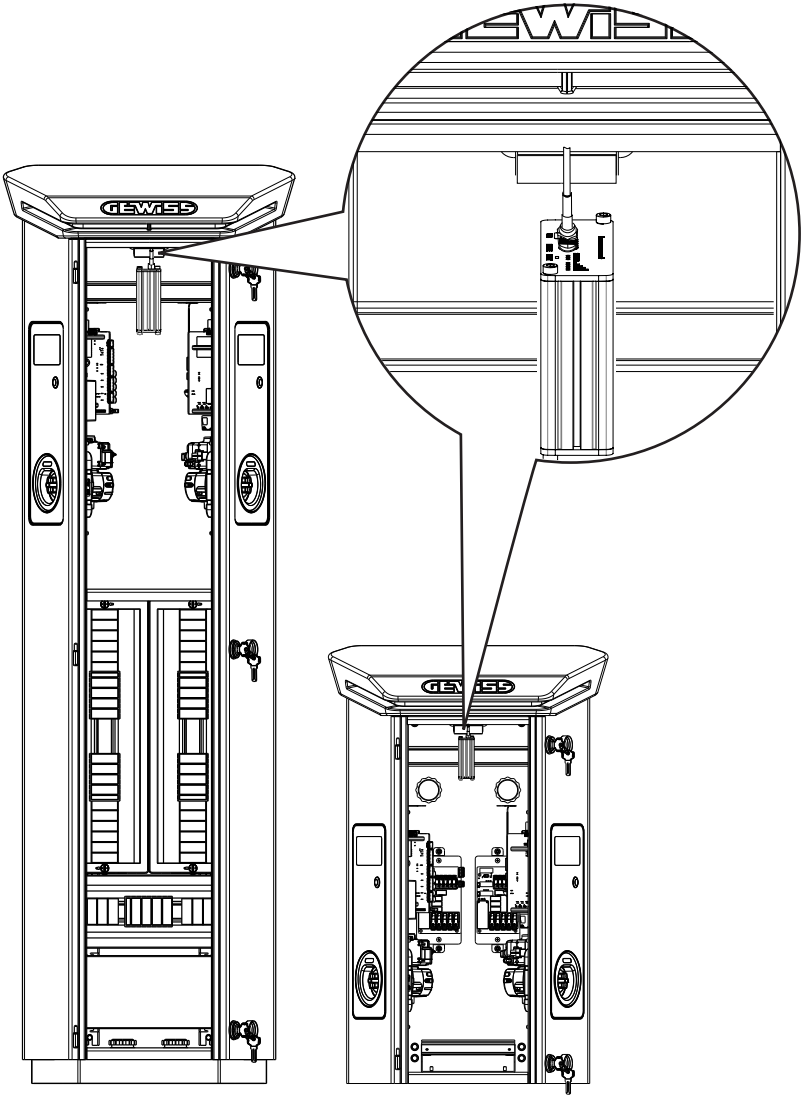

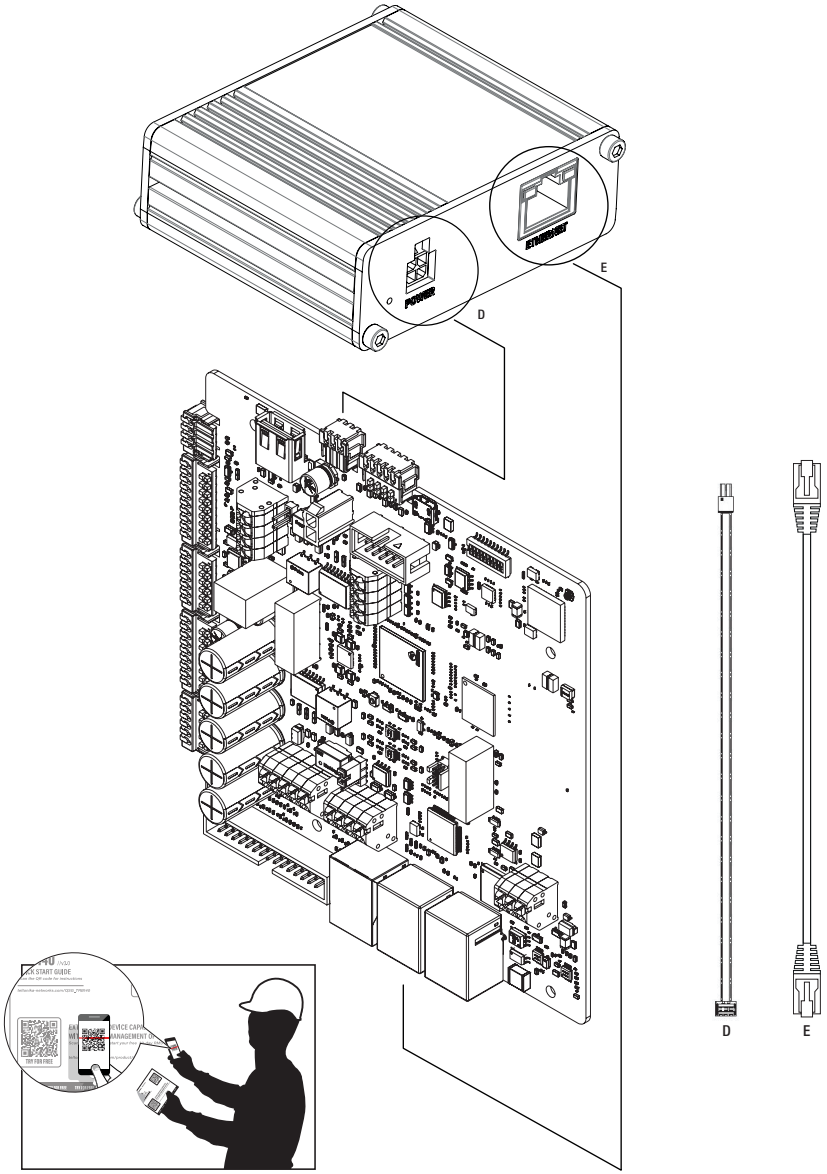

Punto di contatto indicato in adempimento ai fini delle direttive e regolamenti UE applicabili:
Contact details according to the relevant European Directives and Regulations:
GEWISS S.p.A. Via D.Bosatelli, 1 IT-24069 Cenate Sotto (BG) Italy tel: +39 035 946 111 E-mail: qualitymarks@gewiss.com

According to applicable UK regulations, the company responsible for placing the goods in UK market is:
GEWISS UK LTD - Unity House, Compass Point Business Park, 9 Stocks Bridge Way, ST IVES Cambridgeshire, PE27 5JL, United Kingdom tel: +44 1954 712757 E-mail: gewiss-uk@gewiss.com

+39 035 946 111
8:30 - 12:30 / 14:00 - 18:00
lunedì - venerdì / monday - friday

www.gewiss.com

ULTIMA REVISIONE 10/2024