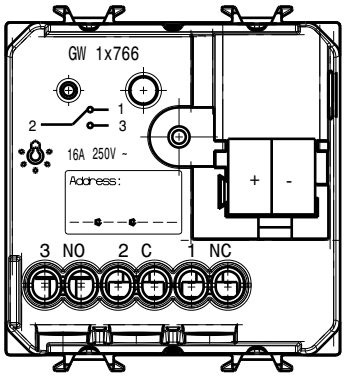
GW 1x766
1
2
3
16A 250V ~
Address:
+
-
3 NO
2 C
1 NC

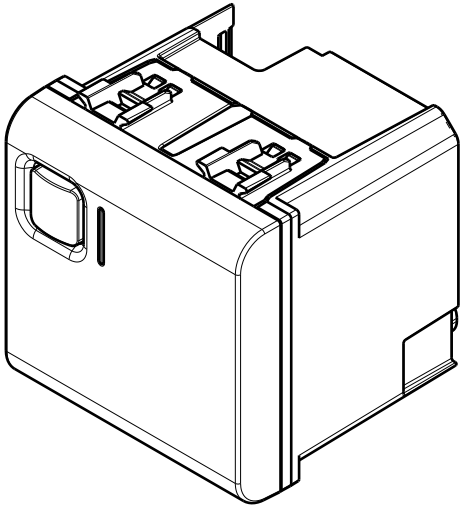

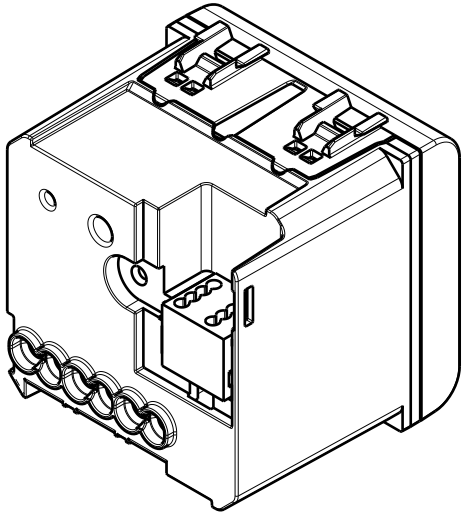

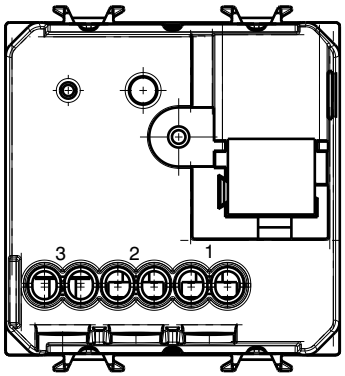
3
2
1

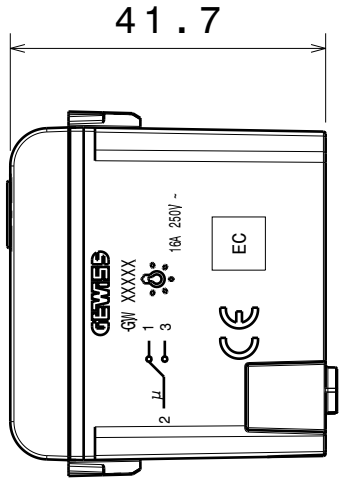
41.7
GW XXXXX
16A 250V ~
EC

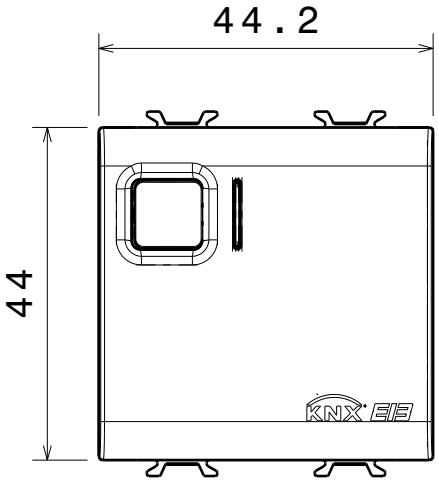
44.2
44