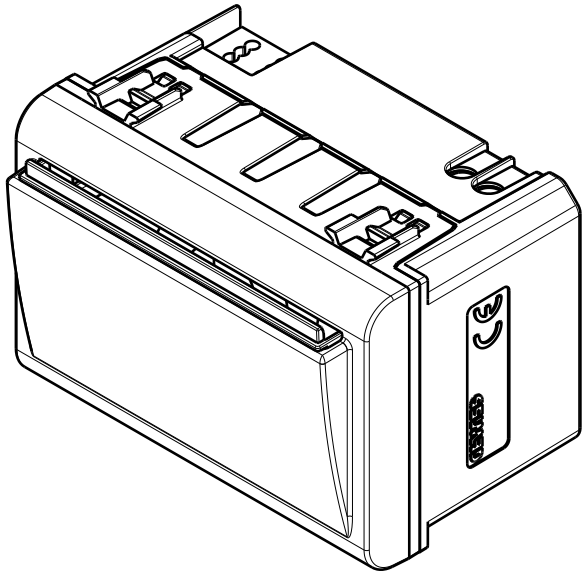

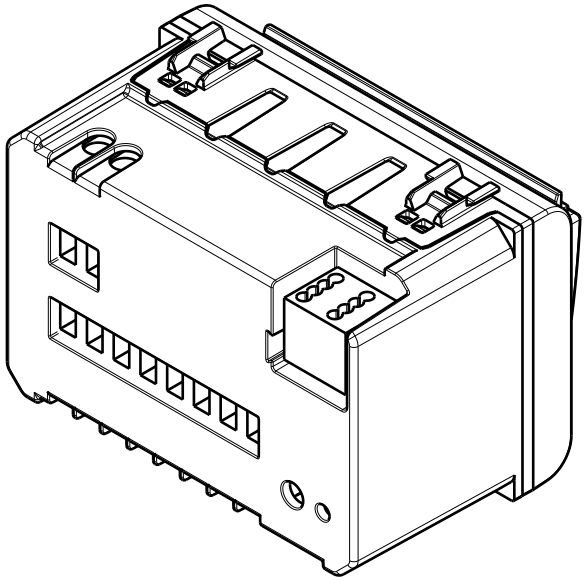

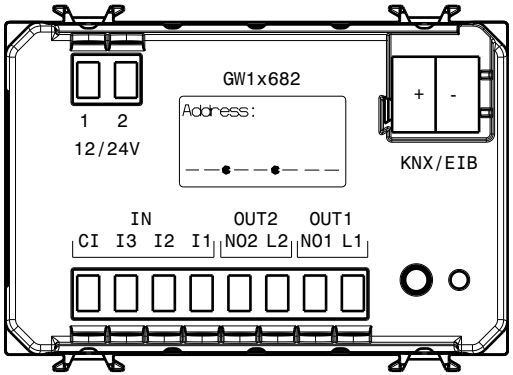
GW1x682
Address:
1 2
12/24V
+ -
KNX/EIB
IN
OUT2
OUT1
CI I3 I2 I1
NO2 L2
NO1 L1

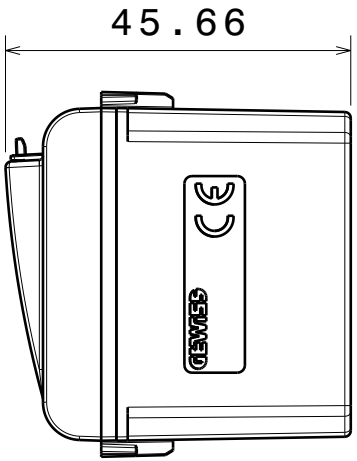
45.66

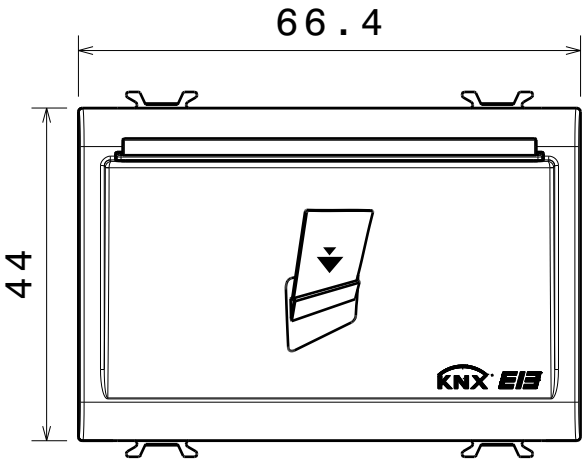
66.4
44